■

XT2063 /

■

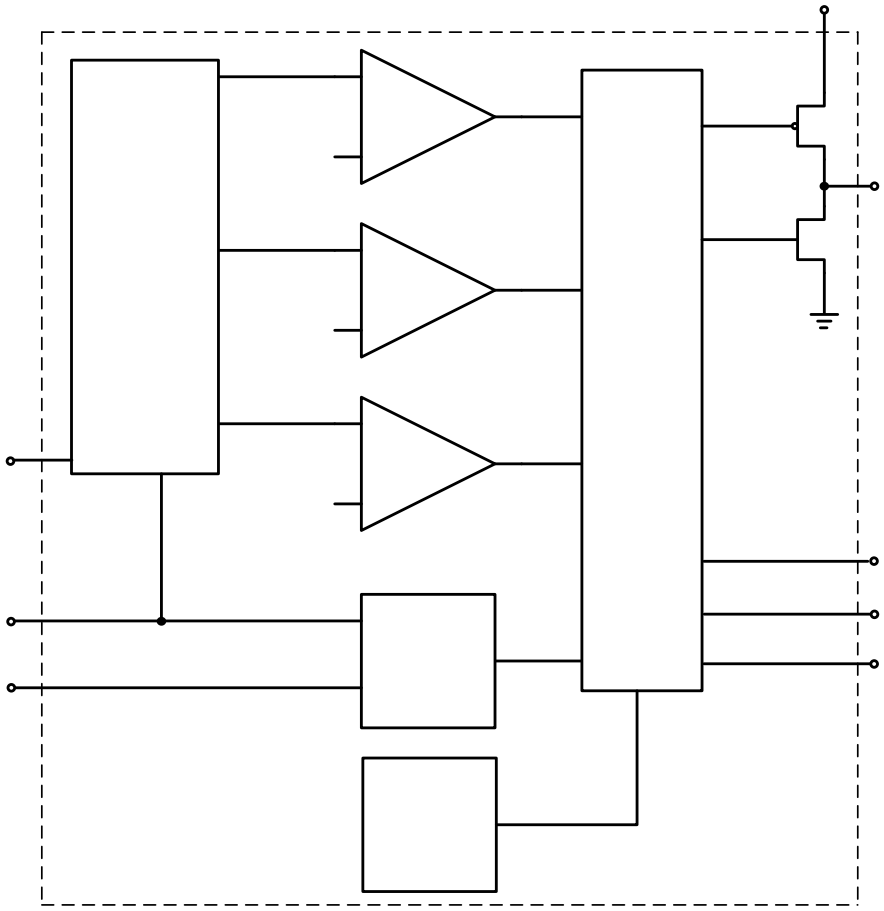

■

XT2063

		A	
		F	
		D	FB
		1	4.2
		D	DFN3*3-10L(D)
		M	DFN3*3-10L(M)
		R	
		L	

■

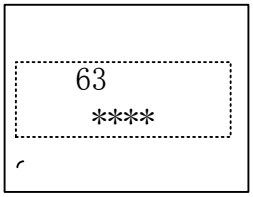
63
****

■

1

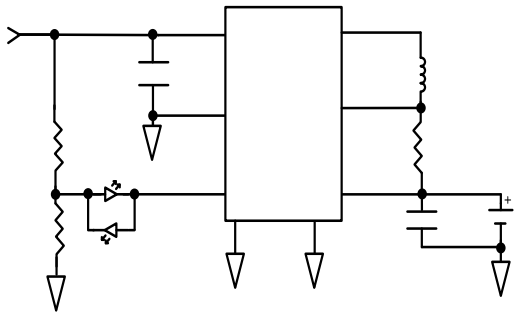

2

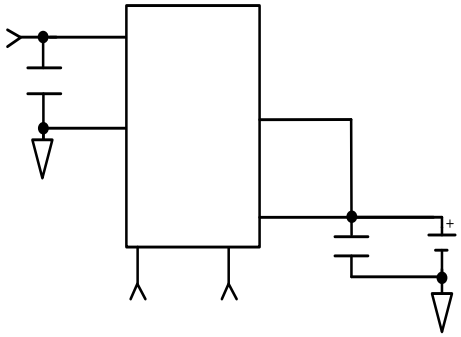

PIN

■

1.

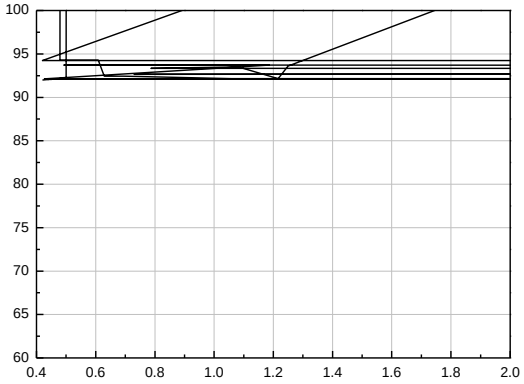

5.

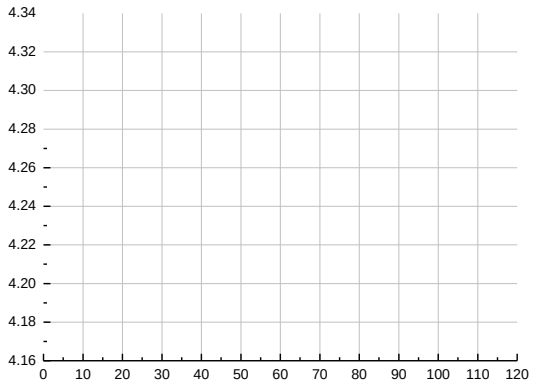
4.34
4.32
4.30
4.28
4.26
4.24
4.22
4.20
4.18
4.16
0
10
20
30
40
50
60
70
80
90
100
110
120

6. SW

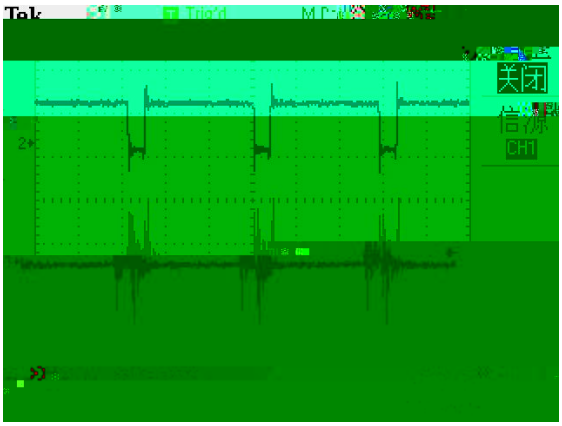
关闭
CH1

■

■

XT2063 PWM DC-DC VBATT SENSE

VIN UVLO 4.35V SLEEP MODE 60μA VIN UVLO LED 2.9V 25

100mV IBATT=100mV/V3670D.0373.71>>BDC /TT1 9 Tf270.046 0 T4(

■

DFN3*3-10L

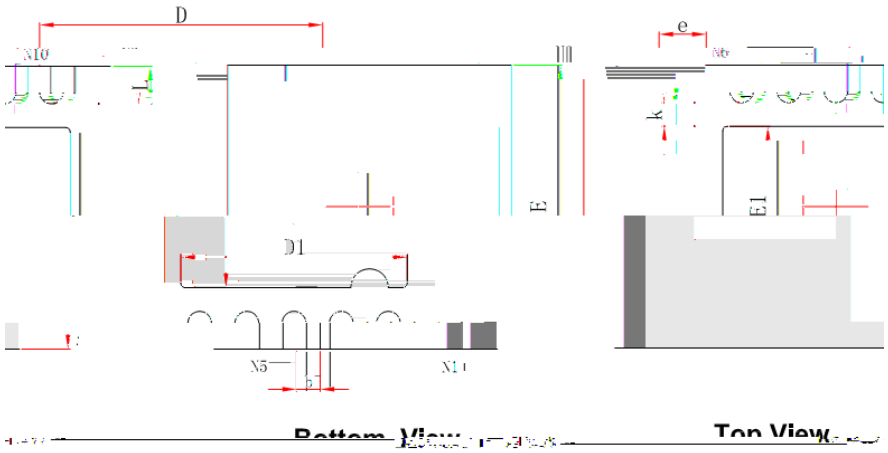

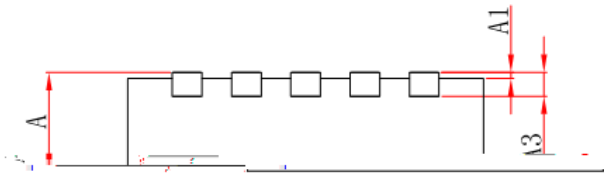

Side View

Symbol	Dimensions In Millimeters		Dimensions In Inches	
	Min.	Max.	Min.	Max.
A	0.700/0.800	0.800/0.900	0.028/0.031	0.031/0.0
A1	0.000	0.050	0.000	
A3	0.203REF		0.008REF	
E	2.900	3.100	0.114	
D1	2.300	2.500		
E1	1.600	1.800		
K	0.008MIN		0.200MIN	
	0.007	0.012	0.180	
	0.020TYP			
	0.500	0.012	0.020	0.300