■

XT4086 /

XT4086 USB

MOSFET

4.2V

1/10

XT4086 USB

XT4086

1μA XT4086

40μA

XT4086

IC

■

1A

14.5V

MOSFET

/

USB

4.2V ±1%

1/10

40μA

2.5V

■

ESOP8

■

PDA MP3

■

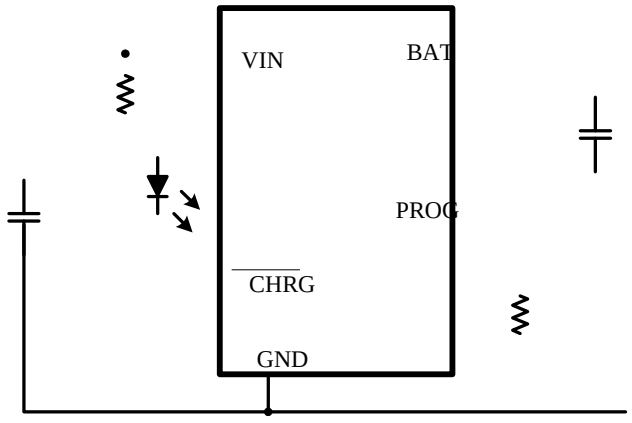

C1=4.7uF C2=4.7uF IBAT = (V_{PROG}/R_{PROG})*1100

■

XT4086

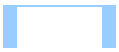

■

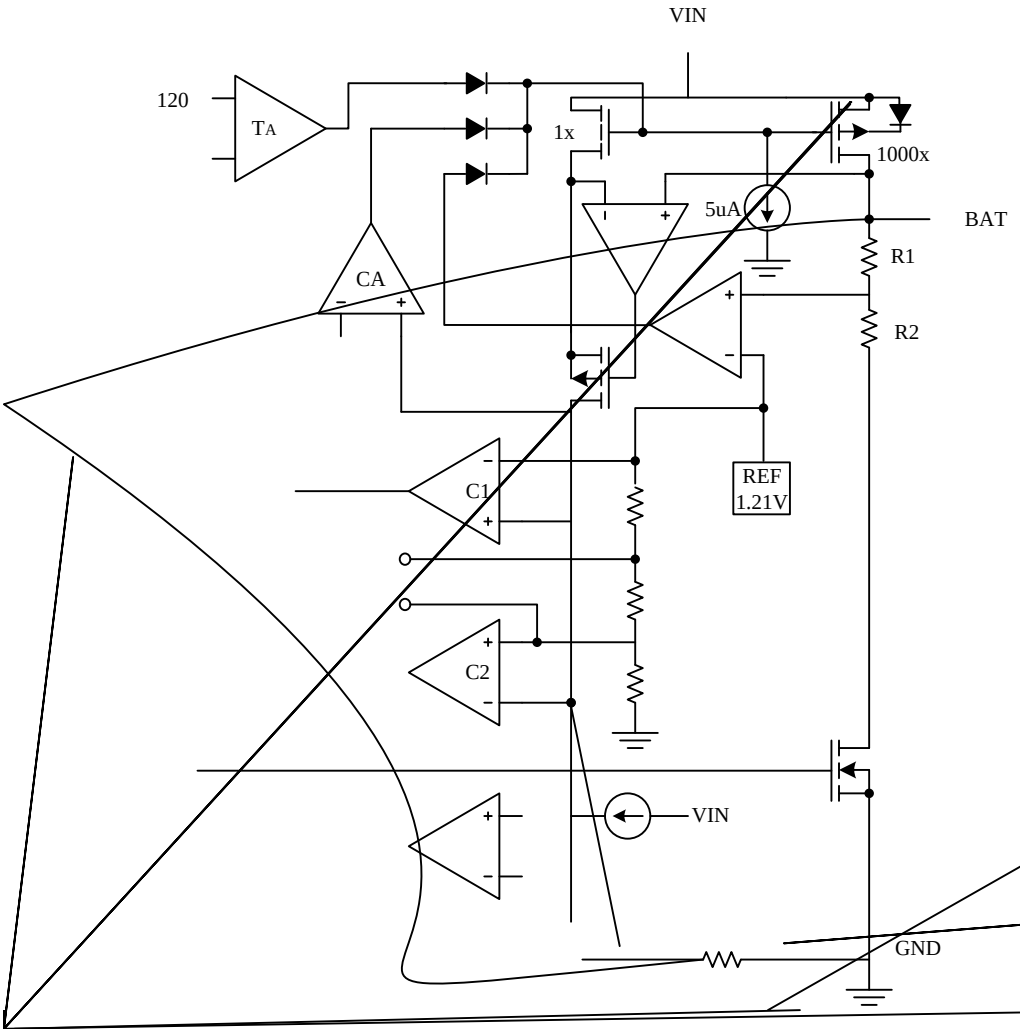

■

	V_{IN}	-0.3 14.5	V
PROG	V_{PROG}	-0.3 6	
BAT	Vbat	-0.3 +12	
$\overline{CHRG}$ $\overline{DONE}$	Vchrg	-0.3 +14.5	
	P_D	1.2	W
BAT	Ibat	1500	mA
PROG	IPROG	1500	uA
	Topa	-40 +85	°C
	Tstr	-65 +125	

■

(TA=25 unless otherwise noted)

■

I_{PROG}= 1100V / R_{PROG} ISET R_{PROG} PROG

500

R_{PROG} 1%

USB

XT4086 USB 3 USB

XT4086 M1 P MOSFET M1

USB D1 USB 1K

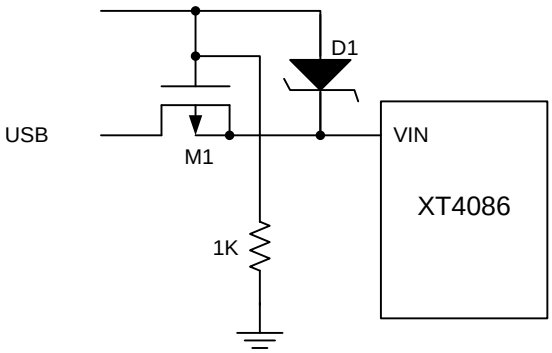

XT4086

1. USB

ISET XT4086 2

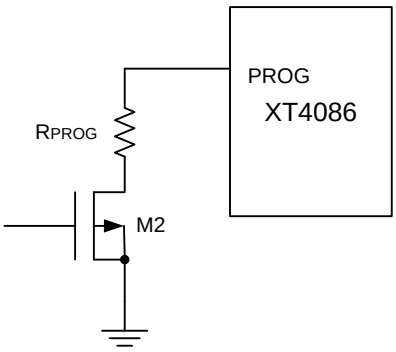

[0)ITET EM P MDD 80>BDC BT1 0 0 20532.14 185.24 T 0.024 T086

4.7uF

CHRG DONE

CHRG					
DONE					

1 CHRG 4.7μF

2 PROG V_{IN}<Vbat,V_{IN}<3.8V

XT4086 V_{IN} BAT BAT

■

1 BAT

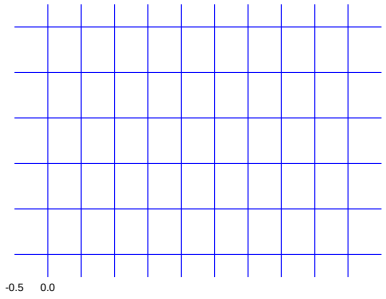

Vin=5V Rprog=2.2K

2 BAT

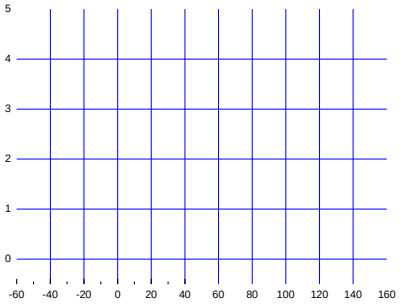

Vin=5V Rpog=2K IL=40mA

3 BAT

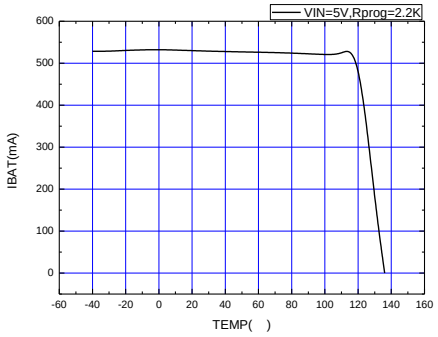

Vin=5V Rpog=2.2K VBAT=3.6V

4 PROG

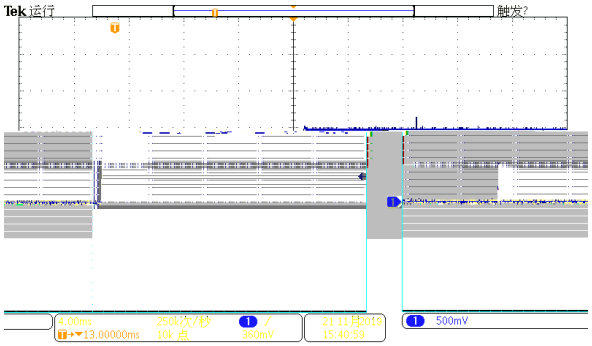

VIN=5V VBAT=3.6V Rprog=2K

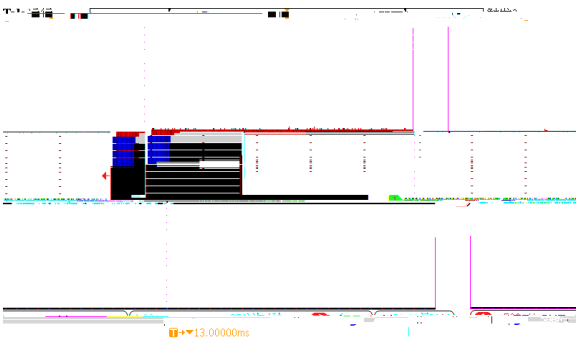

VIN=5V VBAT=3.6V Rprog=10K

■

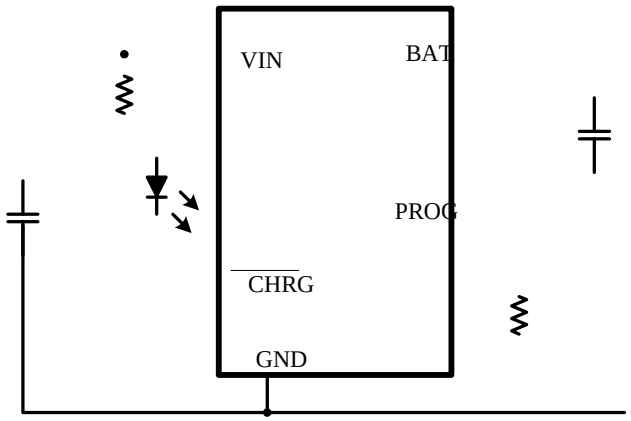

ICH = 1100 / RPROG ICH RPROG PROG

500 RISET = 1100/0.5 = 2.2K

RPROG 1% PROG

ICH = (VPROG / RPROG) × 1100

C1=4.7uF C2=10uF PCB

2

OVP

OVP 27 OVP 7V

100 OVP 6.2V OVP OVP LED

■

XT4086