PFM DC-DC

■

XT1864 ↓ ج w ƀ
PFM ᒪ ᐧ ᐧ DC-DC ΐ ᔕ ˆ ą
ο ą ₮ ˜ ˜
XT1864 ↓ ج 3 ˝Ḥ ᔕ , ᐧ ˆ
˜ ᐧ ˜

■

1~3
ĩ
LED LED
ᐧ MP3 ΐ
ᐯ ᔕ
ᔕ ᔕ ˜Ḥ ᔕ
VCR PDA

■

94%
ƀ 300KHz
7μA
₮ ᐧ 1.8V 5.0V 0.1V
₮ ± 2%
˜ ᐧ 0.9V 6.5V
ᔕ
ʳ

■

SOT23-5L

■

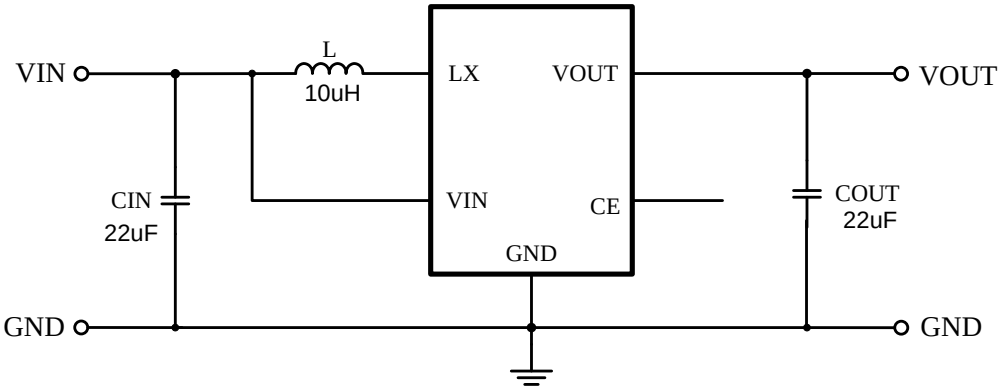

■

XT1864 B -

ˆ		
	18-50	₮ ᐧ ṿ ᵖ 33=3.3V
	2	₮ ᐧ ṿ ± 2%
	S	SOT23-5L
	R	ᐧ h h
	L	ᐧ h ỉ h
	G	

■

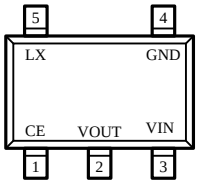

SOT23-5L
(TOP VIEW)

■

SOT23-5L	O	w
5	LX	
2	VOUT	
1	CE	
4		

■

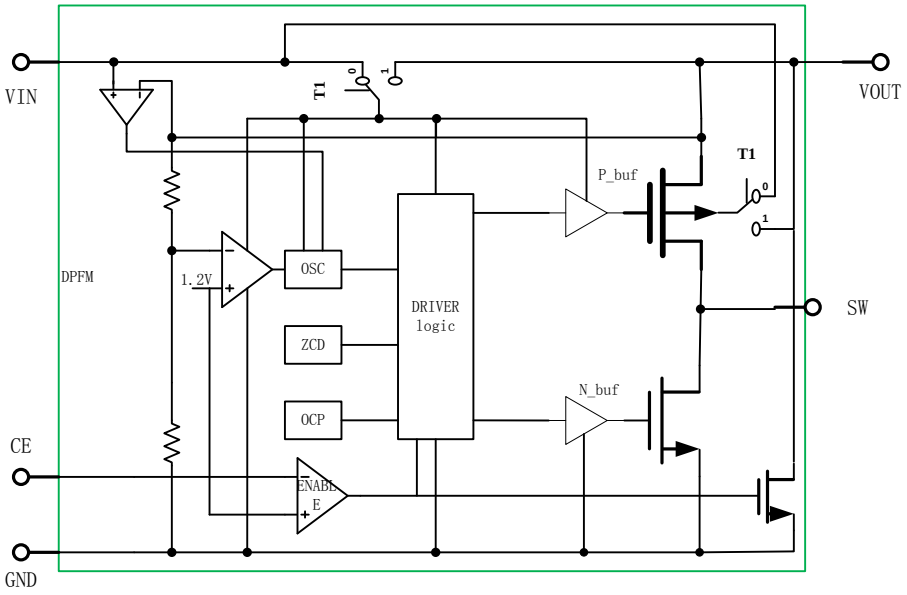

■

	V_{max}	VOUT VLX	6.5	V
	ILXmax	LX	1000	mA
	P_D	SOT23-5L	350	mW
	Tmin-max		-40—85	°C
	Tstorage		-40—165	
ESD	V_{ESD}		4000	V

■

(TA=25 unless otherwise noted)

	V_{OUT}	-	-2.0	-	2.0	%
	VIN_{MAX}	-	0.9	-	6.5	V
	V_{START}	I_{LOAD}=1mA,V_{IN}:0→2V	-	-	0.8	V
	V_{HOLD}	I_{LOAD}=1mA,V_{IN}:2→0V	0.6	-	-	V
	DC_{OSC}	-	-	-	78	%
		-	-	90	94	%
	I_{LIMIT}	-	600	800	1000	mA
	L_{INO}	V_{IN}=1.8V,V_{OUT}=3.0V	-	7	-	μA

■

■

■

SOT23-5L

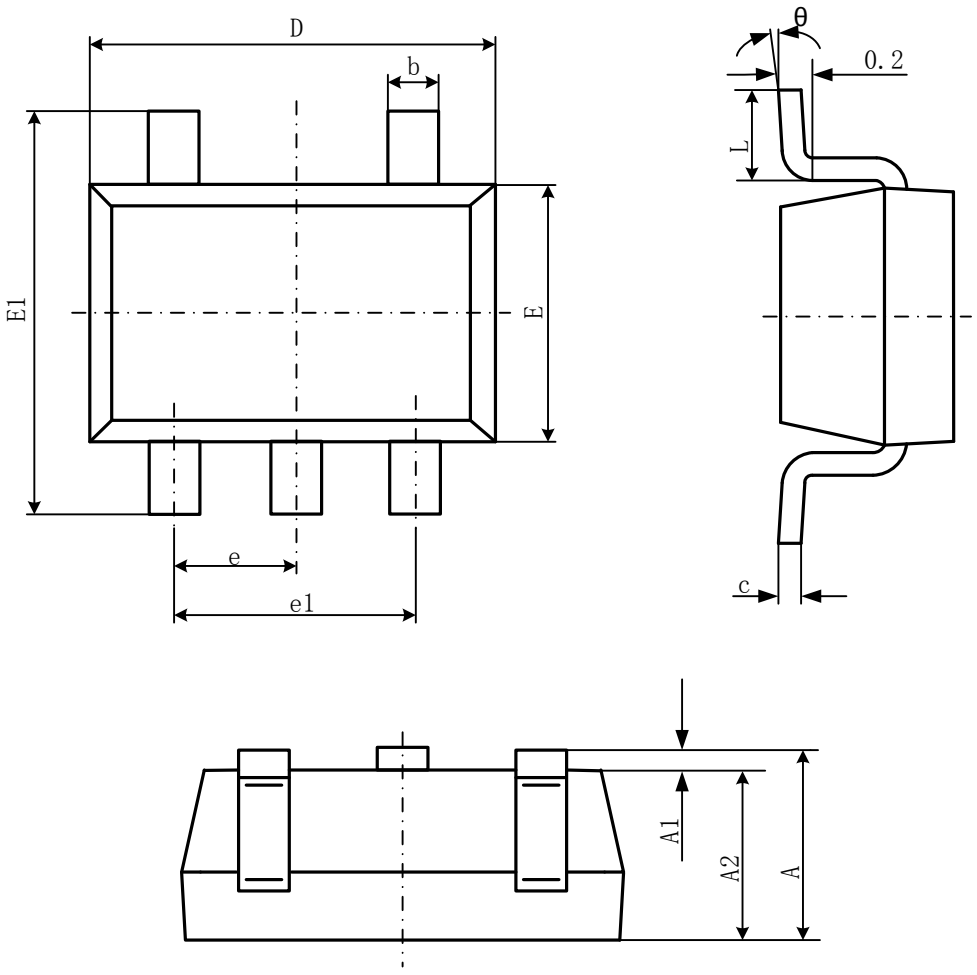

Symbol	Dimensions In Millimeters		Dimensions In Inches	
	Min	Max	Min	Max
A	1.050	1.250	0.041	0.049
A1	0.000	0.100	0.000	0.004
A2	1.050	1.150	0.041	0.045
b	0.300	0.500	0.012	0.020
c	0.100	0.200	0.004	0.008
D	2.820	3.020	0.111	0.119
E	1.500	1.700	0.059	0.067
E1	2.650	2.950	0.104	0.116
e	0.950(BSC)		0.037(BSC)	

e1	1.800	2.000	0.071	0.079
L	0.300	0.600	0.012	0.024
	0 °	8 °	0 °	8 °