CMOS

LN71XX CMOS 2.5μA

±2%

70mA 28V

1.8V 5.0V

CMOS

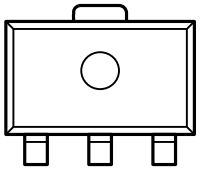

SOT89-3L
(TOP VIEW)

TO

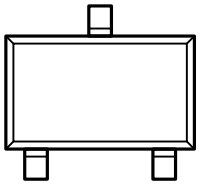

SOT23-3L
(TOP VIEW)

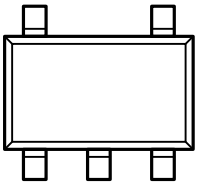

SOT23-5L
(TOP VIEW)

SOT89-3L(A)	**SOT89-3L(B)**	**TO-92**	**SOT23-3L**	**SOT23-5L(B)**	**SOT23-5L(A)**		
1	2	1	1	1	2	GND	
2	3	2	3	2	1	VIN	
3	1	3	2	3	5	VOUT	
-	-	-	-	4	3	NC	
-	-	-	-	5	4	NC	

SOT89-3L TO-92

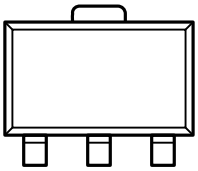

SOT89-3L
(TOP VIEW)

TO-92
(FRO

	LN71

		=3 =0 3.0V

SOT23-3L SOT23-5L

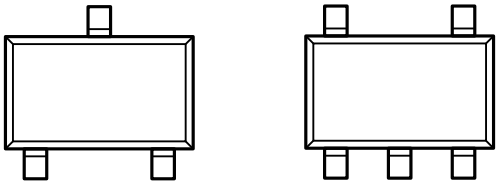

SOT23-3L
(TOP VIEW)

SOT23-5L
(TOP VIEW)

	LN71

		=3 =0 3.0V

0 9 A Z G I J O Q W

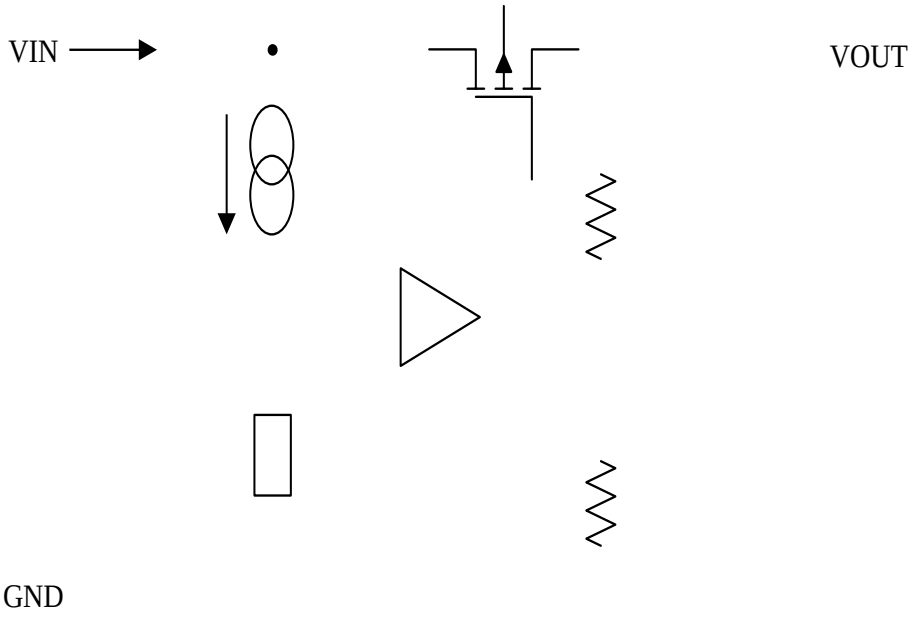

		V_{IN}	-0.3 28	V
		V_{INBV}	40	V
	SOT89-3L	Pd	500	mW
	TO-92		300	
	SOT23-5L		250	
	SOT23-3L		250	
		Topr	-40 +85	
		Tstg	-40 +125	

(TA=25 unless otherwise noted)

9. VS

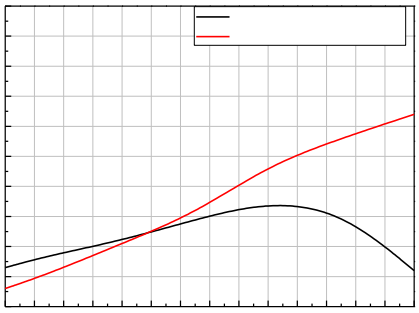

10. VS



11. VS

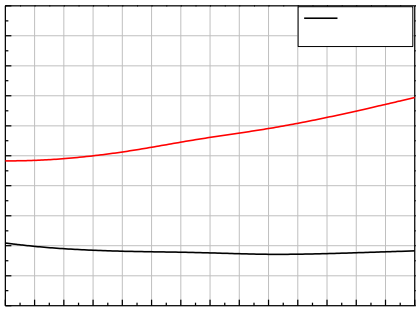

12. VS

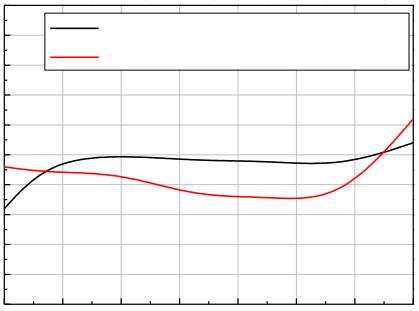

14. VIN=4.3V-5.3V, IL=10mA

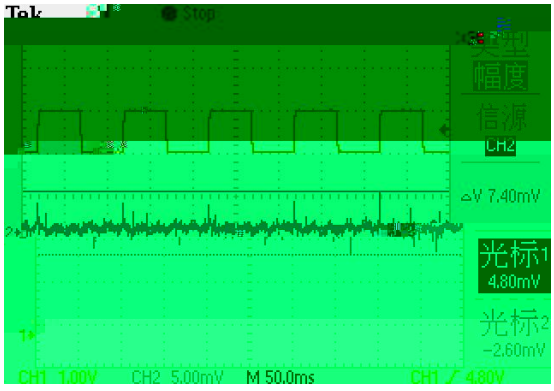

15. VIN=4.3V, IL=0-70-0mA

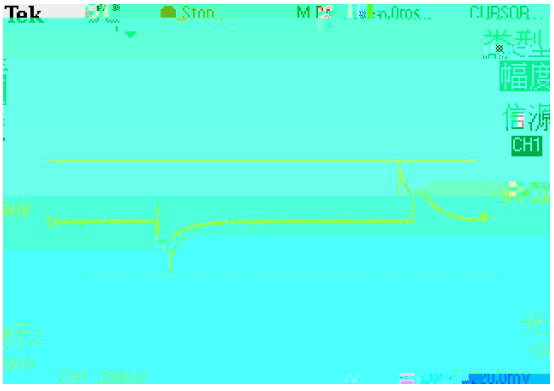

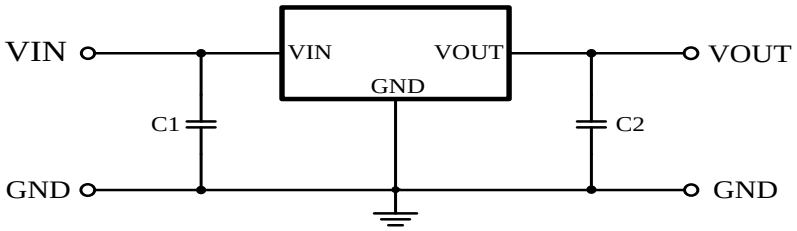

10uF 40V

PCB

PCB

SOT89-3L

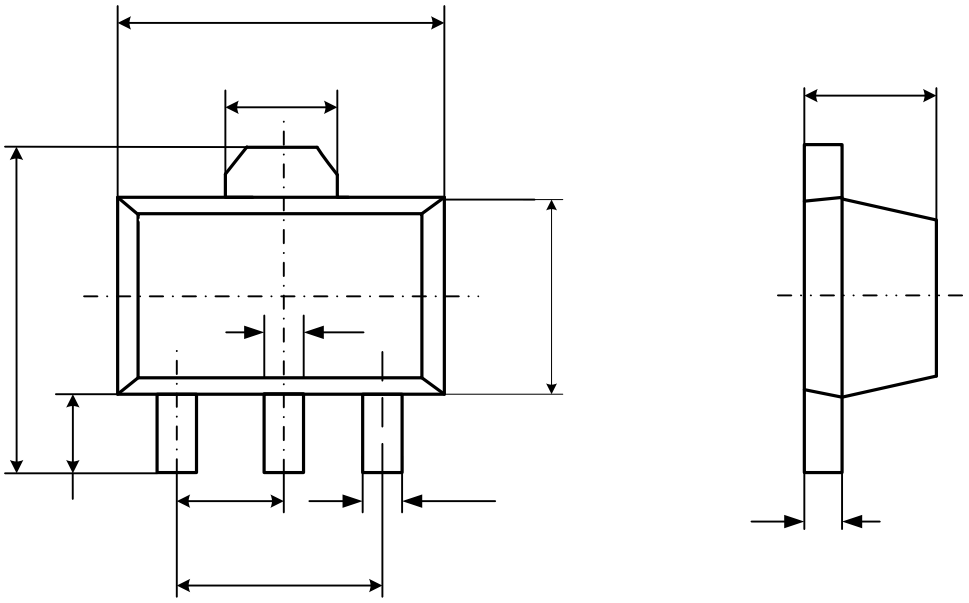

Symbol	Dimensions In Millimeters		Dimensions In Inches	
	Min	Max	Min	Max
A	1.400	1.600	0.055	0.063
b	0.320	0.520	0.013	0.020
b1	0.400	0.580	0.016	0.023
c	0.350	0.400	0.014	0.017
D	4.400	4.600	0.173	0.181
D1	1.550REF.		0.061REF.	
E	2.300	2.600	0.091	0.102
E1	3.940	4.250	0.155	0.167
e	1.500TYP		0.060TYP	
e1	3.000TYP		0.118TYP	
L	0.900	1.200	0.035	0.047

TO-92

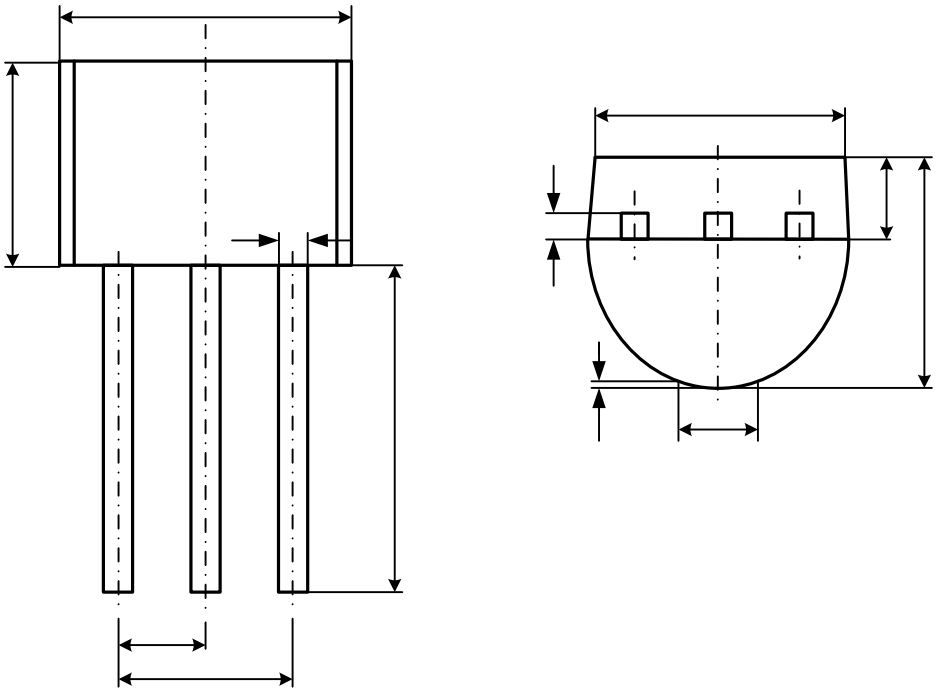

Symbol	Dimensions In Millimeters		Dimensions In Inches	
	Min	Max	Min	Max
A	3.300	3.700	0.130	0.146
A1	1.100	1.400	0.043	0.055
b	0.380	0.550	0.015	0.022
c	0.360	0.510	0.014	0.020
D	4.400	4.700	0.173	0.185
D1	3.430		0.135	
E	4.300	4.700	0.169	0.185
e	1.270TYP		0.050TYP	
e1	2.440	2.640	0.096	0.104
L	14.100	14.500	0.555	0.571
		1.600		0.063
h	0.000	0.380	0.000	0.015

SOT23-5L

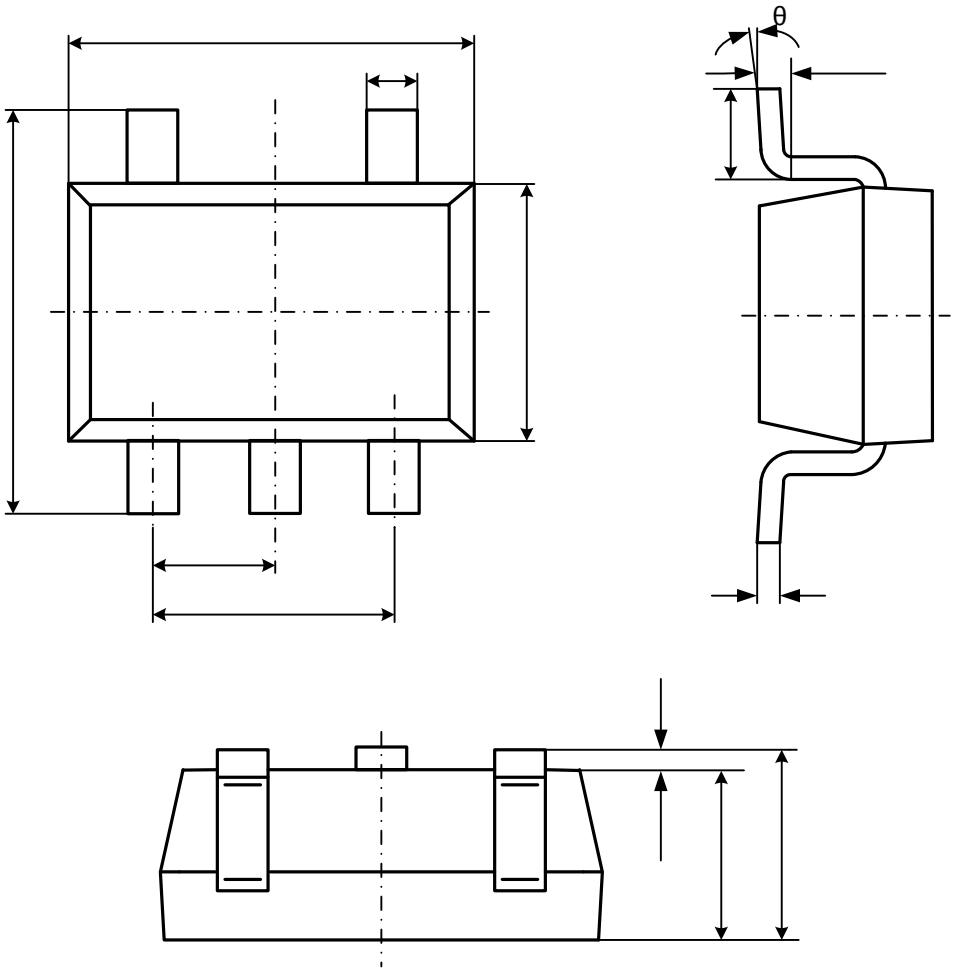

Symbol	Dimensions In Millimeters		Dimensions In Inches	
	Min	Max	Min	Max
A	1.050	1.250	0.041	0.049
A1	0.000	0.100	0.000	0.004
A2	1.050	1.150	0.041	0.045
b	0.300	0.500	0.012	0.020
c	0.100	0.200	0.004	0.008
D	2.820	3.020	0.111	0.119
E	1.500	1.700	0.059	0.067
E1	2.650	2.950	0.104	0.116
e	0.950(BSC)		0.037(BSC)	
e1	1.800	2.000	0.071	0.079
L	0.300	0.600	0.012	0.024
	0 °	8 °	0 °	8 °