Functional Pin Description





Electrical Characteristic

(T_A = . V_{IN} = ,)



Applications Information





Packaging Information

SOT23-5

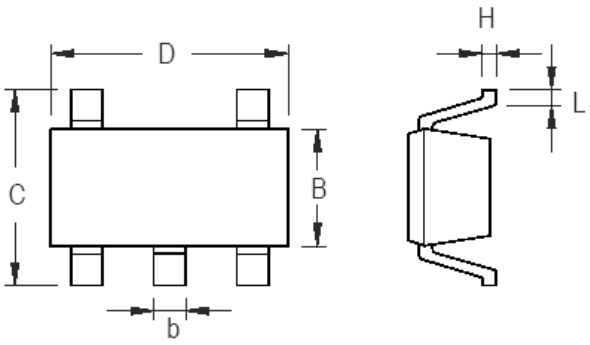

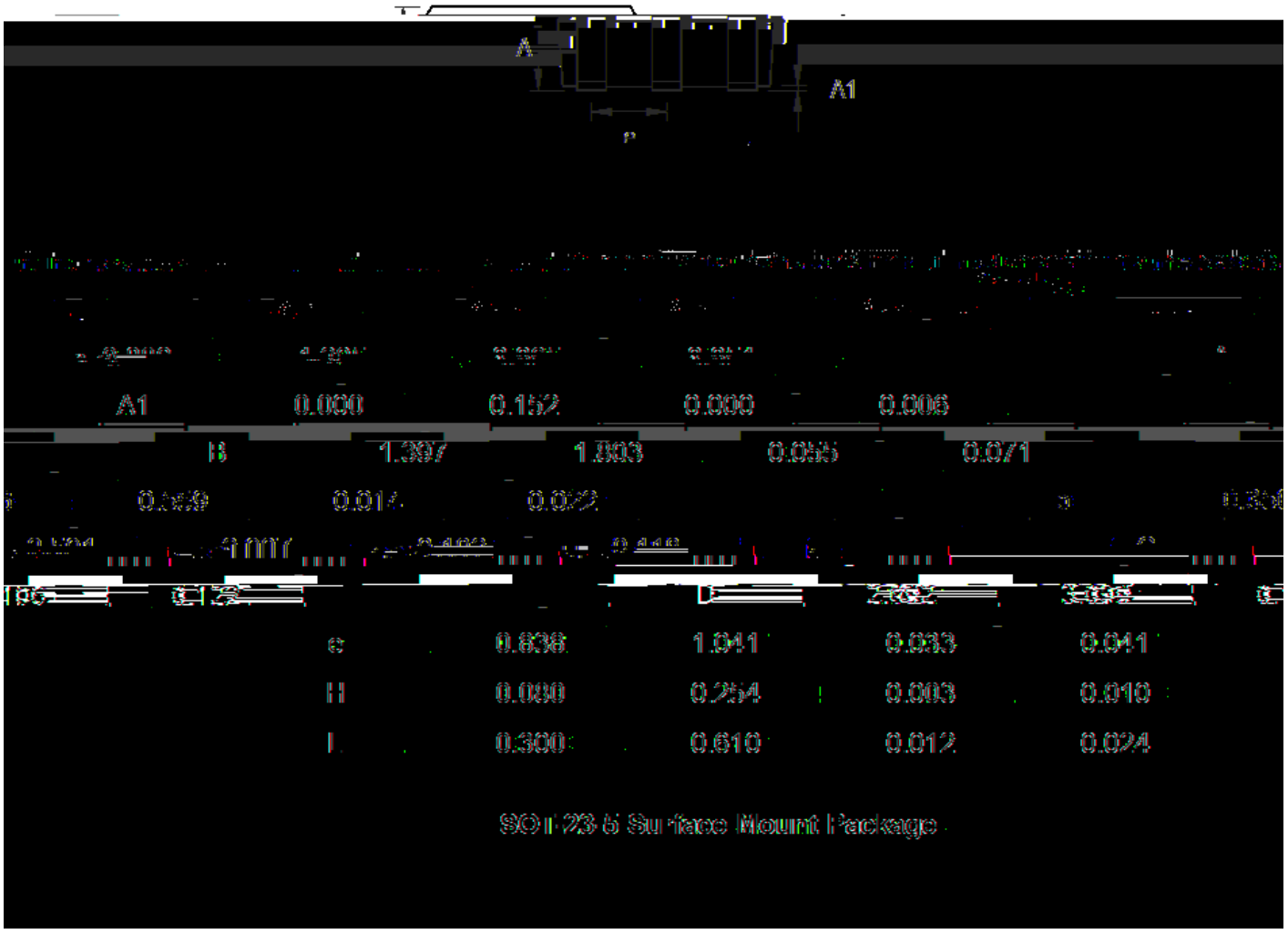

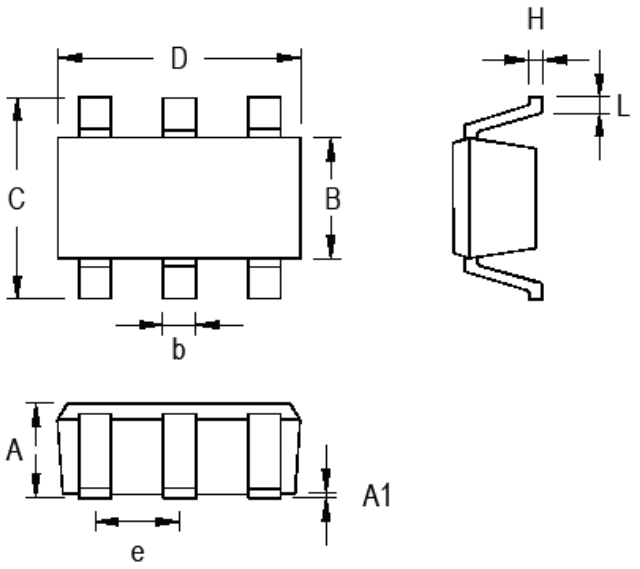

Symbol	Dimensions In Millimeters		Dimensions In Inches	
	Min	Max	Min	Max
A	0.889	1.295	0.031	0.051
A1	0.000	0.152	0.000	0.006
B	1.397	1.803	0.055	0.071
b	0.250	0.560	0.010	0.022
C	2.591	2.997	0.102	0.118
D	2.692	3.099	0.106	0.122
e	0.838	1.041	0.033	0.041
H	0.080	0.254	0.003	0.010
L	0.300	0.610	0.012	0.024