BÞÁ DC-DC ž

XT1861 ↓ ˚˚ ج ẅ ˅ w ȁ ˅ ȁ ƀ

PFM └ ˆ˥ ˆ˥ DC-DC ĩ ƨ Â

XT1861 ↓ ˚˚ ج. 3 ɷ ˝Ḥ ƨ , ˆ˥ ˆ˜ ˅

˜ ˆ˥ ˜ Â

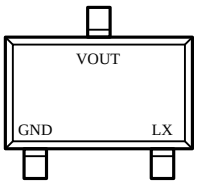

SOT23-3L
(TOP VIEW)

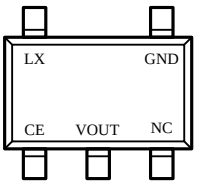

SOT23-5L
(TOP VIEW)

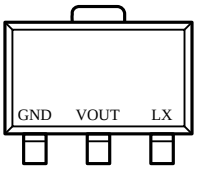

SOT89-3L
(TOP VIEW)

ŷ ๆ ₮ ˧

˝	₮ ˧ˆ V˜			˝	₮ ˧ˆ V˜		
0	-	3.1	-	F	1.6	4.6	-
1	-	3.2	-	H	1.7	4.7	-

	V_{max}	V_{OUT} V_{LX}	6.5	V
	ILXmax	LX	1000	mA

3. ₮ ˧ VS ˜ ˧

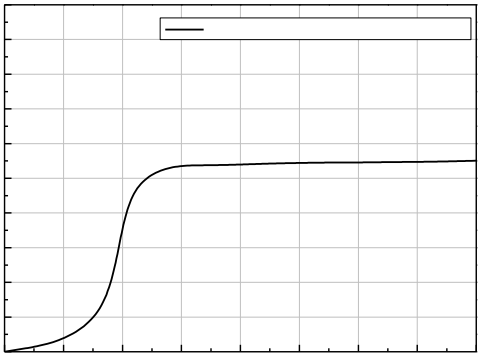

4. VS

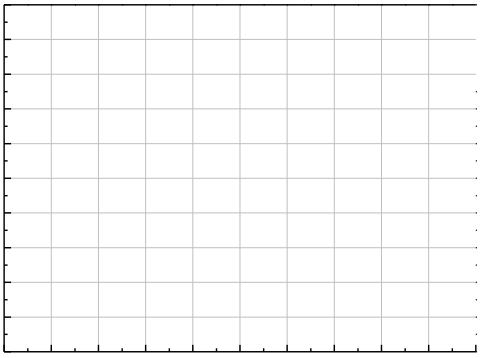

5. VS ˜ ˧

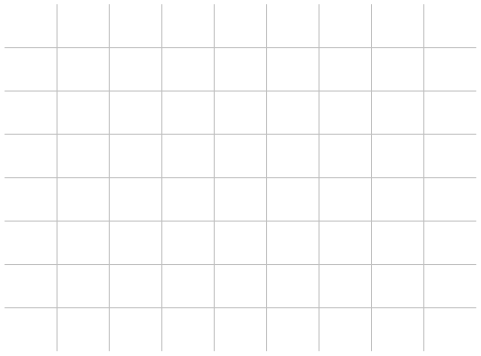

6. VS

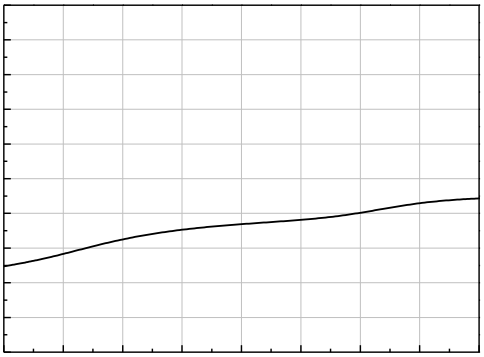

7. Ω˺ ˧ VS

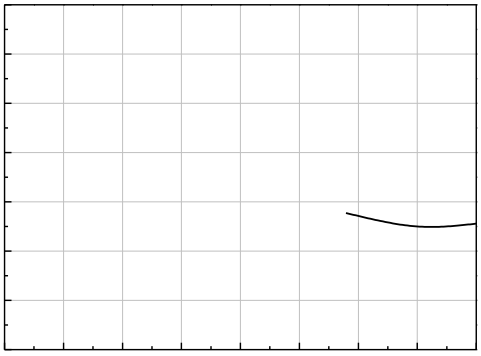

8. ʐ VS



SOT23-3B

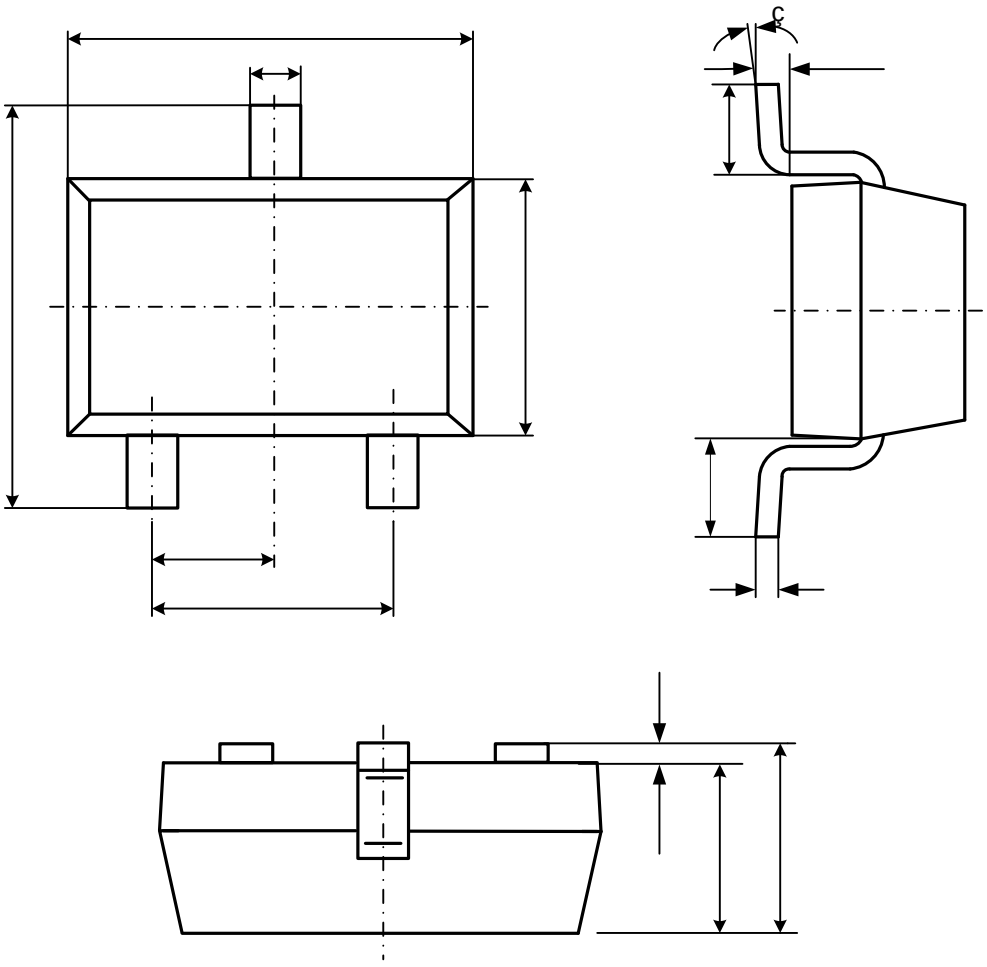

Symbol	Dimensions In Millimeters		Dimensions In Inches	
	Min	Max	Min	Max
A	0.900	1.150	0.041	0.045
A1	0.000	0.100	0.000	0.004
A2	0.900	1.050	0.041	0.041
b	0.300	0.500	0.012	0.020
c	0.080	0.15		

SOT23-5L

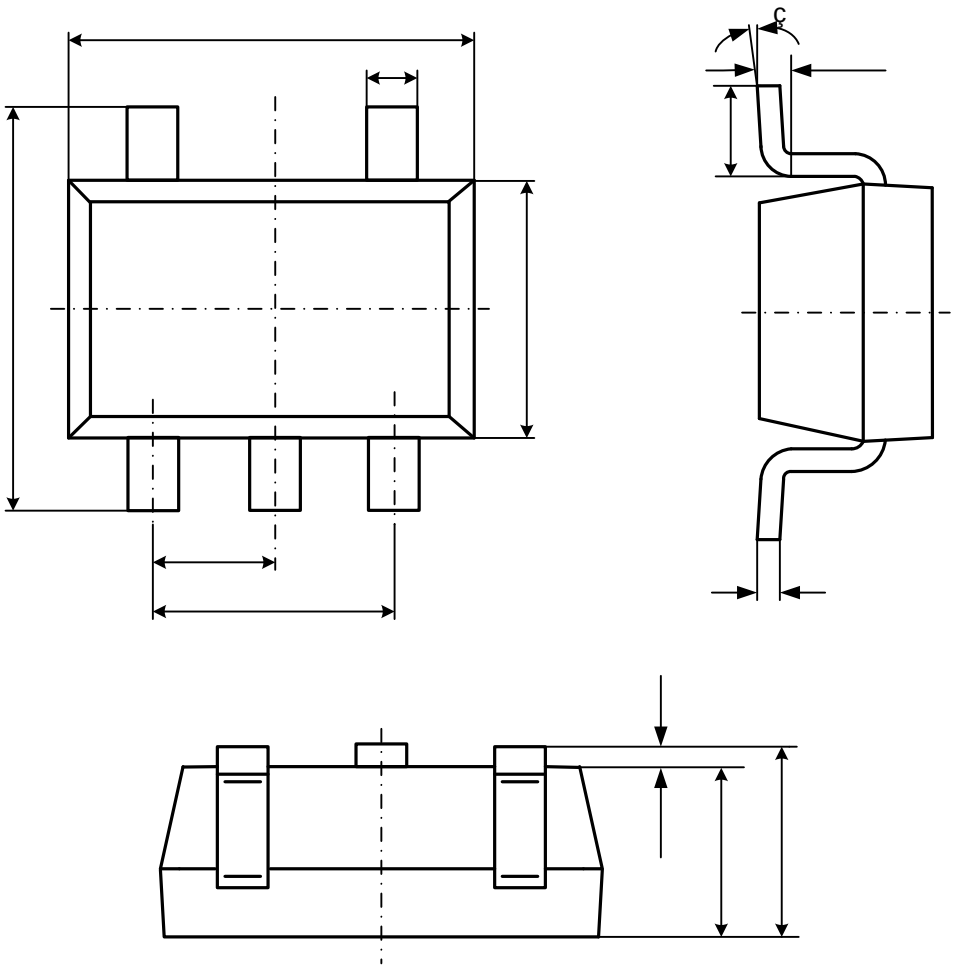

Symbol	Dimensions In Millimeters		Dimensions In Inches	
	Min	Max	Min	Max
A				

SOT89-3L

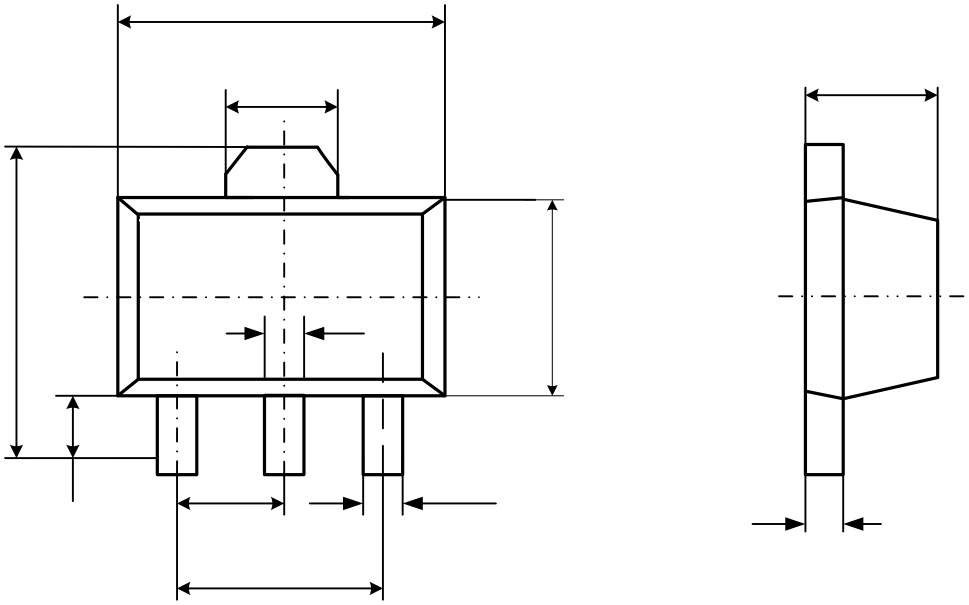

Symbol	Dimensions In Millimeters		Dimensions In Inches	
	Min	Max	Min	Max
A	1.400	1.600	0.055	0.063
b	0.320	0.520	0.013	0.020
b1	0.400	0.580	0.016	0.023
c	0.350	0.400	0.014	0.017
D	4.400	4.600	0.173	0.181
D1	1.550REF.		0.061REF.	