■

XT4099 0h¡8K2/ê¢u+eÈZ+e¨
COÕ+XÊ¢ /Ê¢4WfÄ+X¶
µG PMOSFET Ê¢eDÈ=M0ÊGLÄ
/ÊÑ
u+e+e»Ê¢ 4.2VÈÖf 1%6<u+e+e¢
FÊF5ž+eLkFÁ5ÈWu+eÊî 0.5AÄ(wµGL@
E$)Ê¢u+e+e¢ÊB38ÈWÏÇE
F)Ê¢8(w$ÖÄ 8(wV+e$ÖÖ
¢7ÈÊ¢G+e5,´ NTC +eLkf8ß
(w,ú+e× ¢Ã+e¢2G¶ USB +e¢
È XT4099 8Ø+e¢ÊE%?eL}8# 1uA ¸Ä
X9+e¢Ê¢e+e¢8# 65uAÄ
XT4099 ,[6PLK1Ã EÔ Ã 2.5V Ã
¢+e7ZX7/µ+eÃ,´ LED (1Ä

■ ˘ ˘ ת ■ ˜ ą˜Ḥ ˜

■

SOT23-5	O
1	CHRG
2	GND

9 ƒÊÃ+eB3¤

1V'	VBAT +e»	VBAT 2Ö
A	4.2V	f 1%

: F0}+a(eOGÊ

■

ǟ	ˆ	ỵ		ɿ β
˜ ˧	VIN	-0.3˙ 30		V
TS ˧	Vts	-0.3˙ 30		
BAT ˧	Vbat	-0.3˙ 6		
CHAG	Vchrg	-0.3˙ 6		
PROG ˧	Vprog	-0.3˙ 6		
w	P_D	SOT23-6	0.6	W
BAT	Ibat	1000		mA
ƀ ɔ	Topa	-40˙ +85		°C
Ữ	Tstr	-65˙ +125		

'

■

ǟ	ˆ	Ð	ɣ	Ĩ ɱ		UNIT
˜ ˧	VIN				26.5	V
˜	Icc	Charge mode,Rprog=2.4K		700	1000	µA
		Shutdown mode Rprog=2.4K˜ TS disabled˜		115	200	µA
₮ L ˧	Vfloat	0Ṇ<TA<85Ṇ, IBAT = 40mA	4.16	4.2	4.25	V
BAT	Ibat	Rprog=6k,Current mode	180	200	220	mA
		Standby mode,Vbat=4.2V	0	-2.5	-6	µA
		Shutdown mode		1	2	µA
		Battery reverse mode, VBAT=-4V		0.7		mA
		Sleep mode,VIN=0V		1	2	µA
˜Ḥ	Itrikl	Vbat<Vtrikl,Rprog=2.4k	90	100	110	mA
˜Ḥ ˧	Vtrikl	Rprog=10K˜ Vbat Rising	2.3	2.5	2.7	V
˜Ḥ ˧						

PROGEÃ+e»	V_{PROG}	V_{BAT}=3.8V, R_{PROG}=12k	1.1	1.2	1.3	V
VIN-VbatÐ8l+e»	Vasd	VIN from low to high	160	210	260	mV
		VIN from high to low	70	100	130	mV
4ÿL8l+eq	Iterm/Ic	Rprog=2.4k	0.08	0.105	0.12	mA/mA
CHRG1aÿ+eq	Ichrg	Vchrg=1V				

■

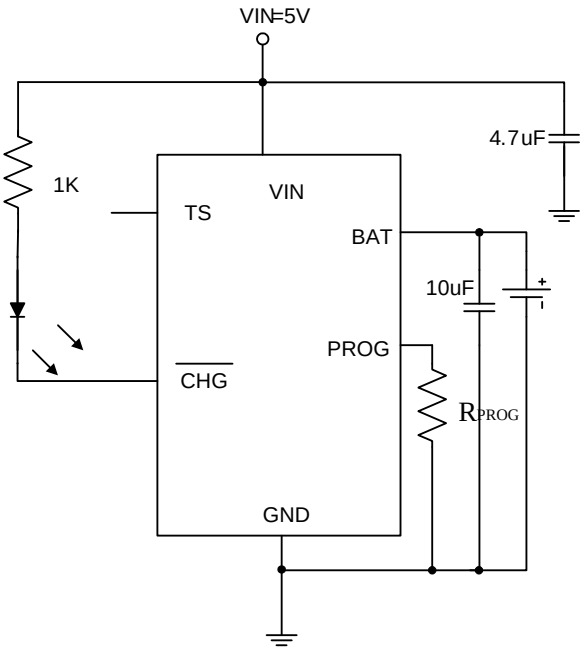

' ˜Ḥ IBAT = (1.2/R_{PROG})*1000×

	˜Ḥ	˜Ḥ		
CHRG ˆ ~	„			

■

■

IBAT = 1200 / RPROGÄ ¦ È IBAT ˜ µ+e+e¡ È RPROG ˜ IREF

1Ñ+eLk¡Ö Ä ¥Ö1 500 ˜ µ+e+e¡ M'¿ÑÖ RPROG = 1200/0.5 = 2.4K »

¡ 8,0cÊ¥ÖÈ RPROG *A¥X2Ö 1%,HŽ+aÊ¡ÊÖ@S.¥Ïn¥Ïs@

SOT23-6L

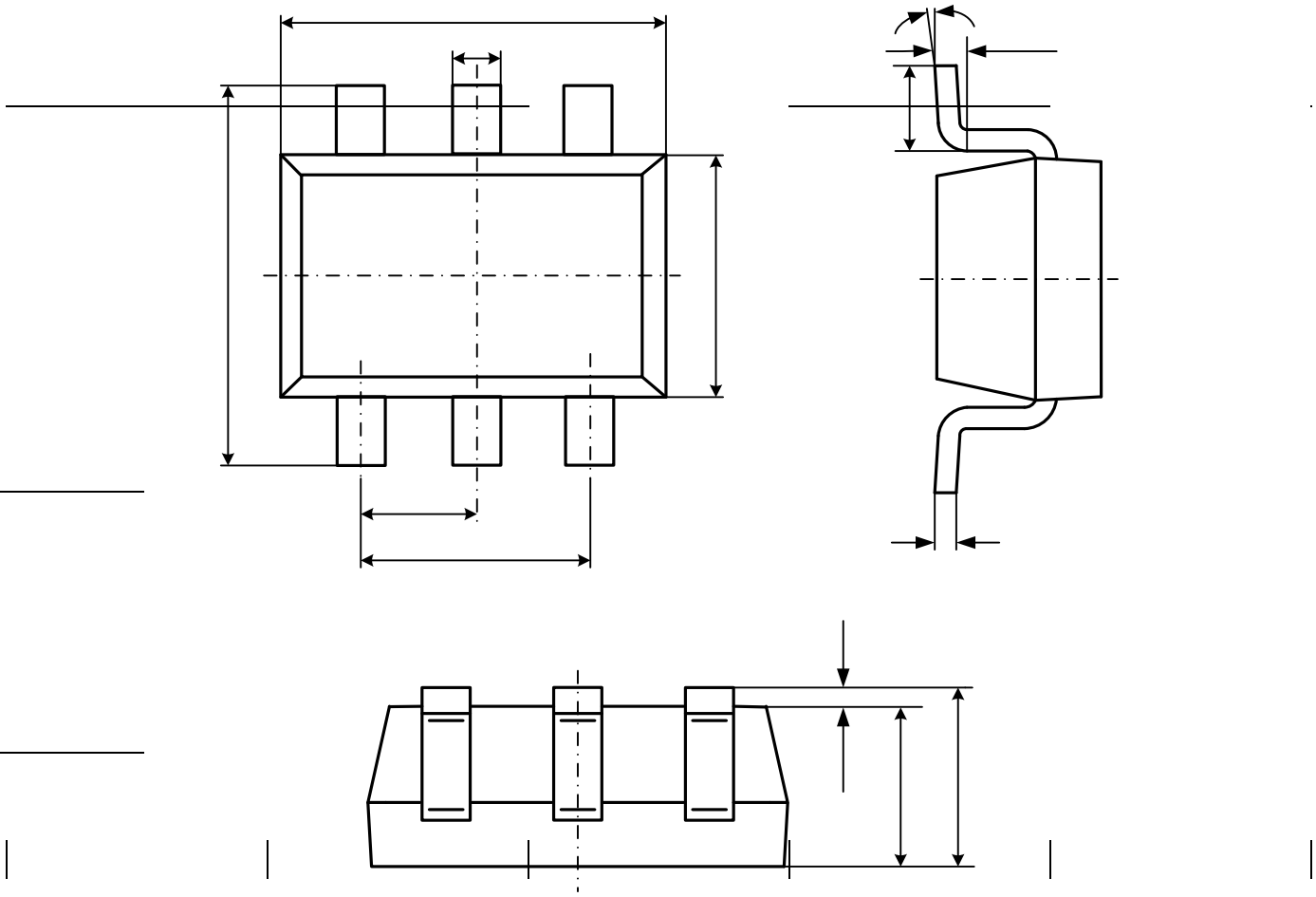

Symbol	Dimensions In Millimeters		Dimensions In Inches	
	Min	Max	Min	Max
A	1.050	1.250		